DCT 4SC

3.1

Install steering rack assembly to chassis using 2-4-40 x 3/8” stainless flat head socket screws and 2 - 6.4mm x 1.1mm blue aluminum spacers as shown.

Qty 2, 4-40 x 3/8” fhcs

Qty 2, 6.4mm x 1.1mm blue aluminum spacer

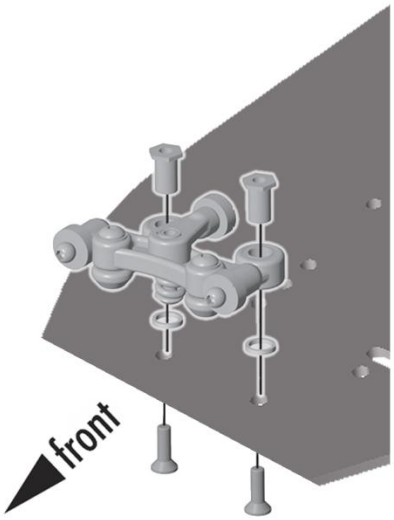

Install (CIRCLE) arm mount to chassis as shown using 2-4-40 x 1/2” stainless flat head socket screws.

{Optional ASC31010 arm mount shims and ASC31065 aluminum arm mount can be used for optimal tuning options}

Qty 2, 4-40 x 1/2” fhcs

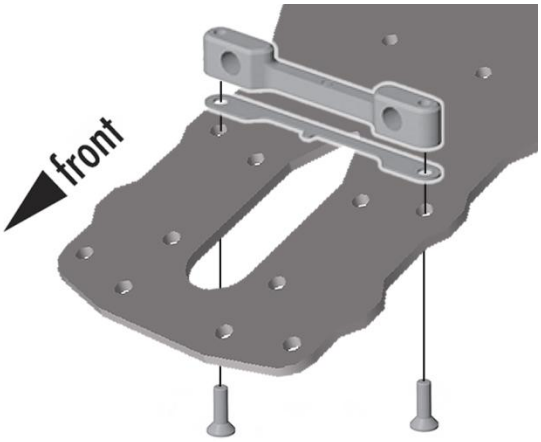

Install front arm assembly and (TRIANGLE) arm mount to chassis as shown using 2-4-40 x 1/2” stainless flat head socket screws.

{Optional ASC31010 arm mount shims and ASC31064 aluminum arm mount can be used for optimal tuning options}

Qty 2, 4-40 x 1/2” fhcs

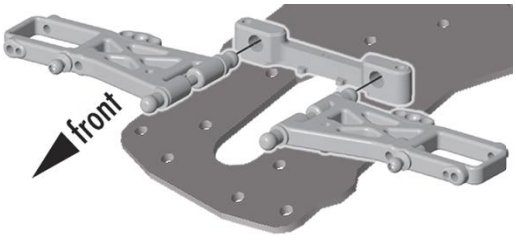

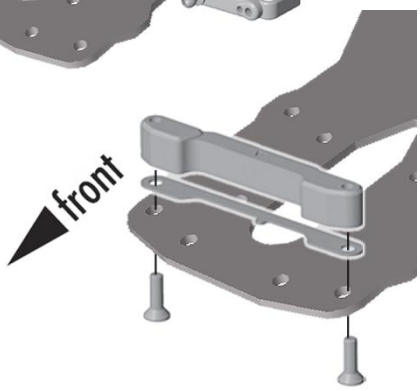

Install (SQUARE) arm mount to chassis as shown using 2- 4-40 x 1/2” stainless flat head socket screws.

{Optional ASC31010 arm mount shims and ASC31066 aluminum arm mount can be used for optimal tuning options}

Qty 2, 4-40 x 1/2” fhcs

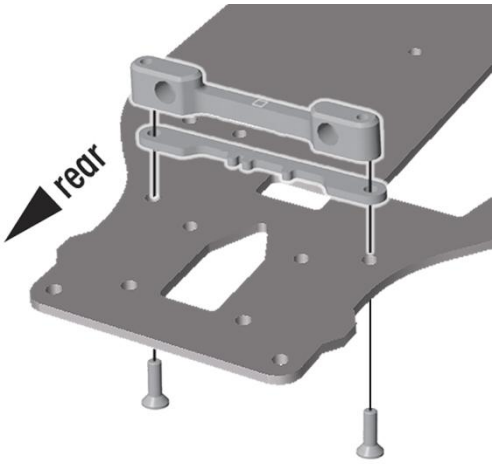

Place 2 - .064” black nylon spacers behind the lower shock mount ball stud.

{This keeps the shock from binding when using the carbon fiber shock tower}

Qty 2, .064” black nylon spacer

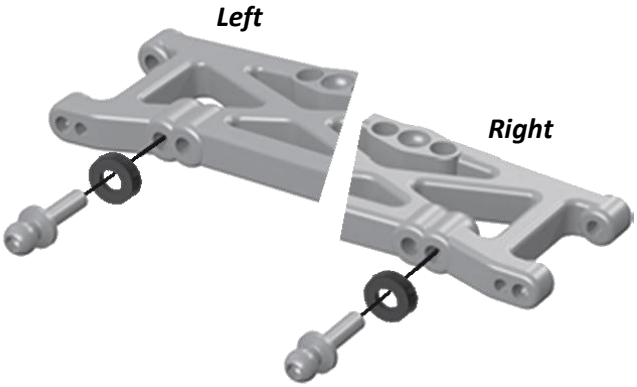

Install rear arm assembly and (X) arm mount to chassis as shown using 2- 4-40 x 1/2” stainless flat head socket screws.

{Optional ASC31010 arm mount shims and ASC31067 (3.0°) ASC31068 (2.5°) or ASC31069 (2.0°) aluminum arm mounts can be used for optimal tuning options}

Qty 2, 4-40 x 1/2” fhcs

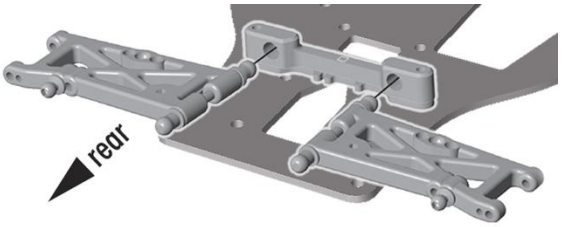

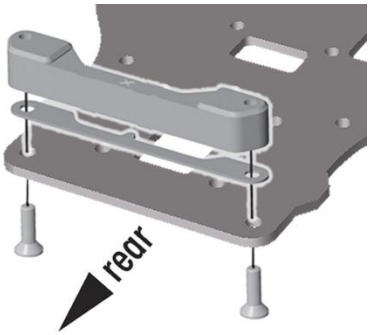

Assemble rear input shaft/spur gear assembly as shown. Remove any shims and install 1- 6.4mm x 1.5mm blue aluminum spacer on drive cup side.

{Use thin washers as needed on drive pinion side to adjust play once spur gear assembly is installed, you will want a tiny bit of play}

Qty 1, 6.4mm x 1.5mm blue aluminum spacer

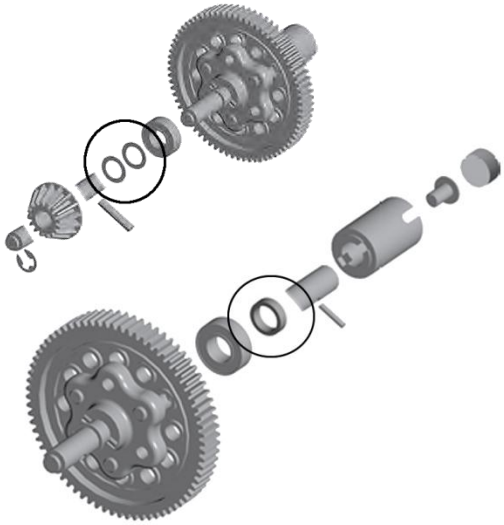

Install blue aluminum motor mount as shown using 2- 3mm x 6mm stainless flat head socket screws.

Qty 2, 3mm x 6mm fhcs

Qty 1, blue aluminum motor mount

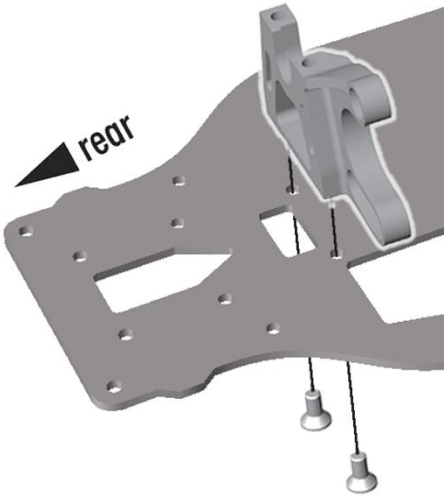

Reference for drive shaft and spur gear assembly installation.

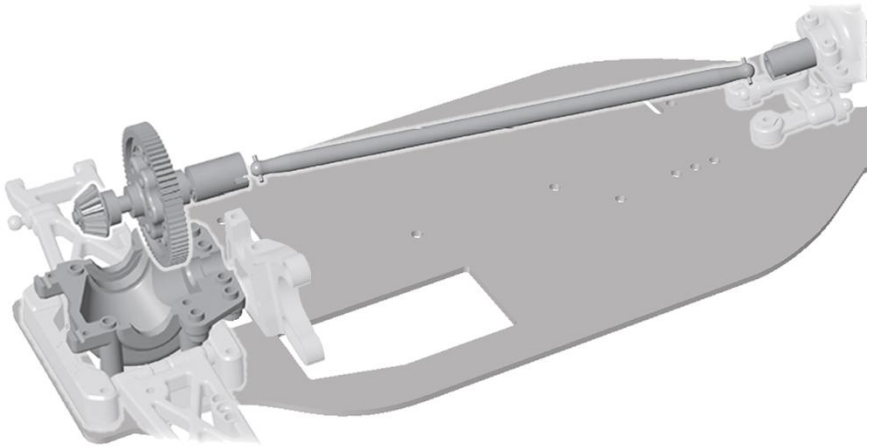

Install front transmission case/caster and steering block assemblies as shown using 4- 4-40 x 3/8” stainless flat head socket screws.

Qty 4, 4-40 x 3/8” fhcs

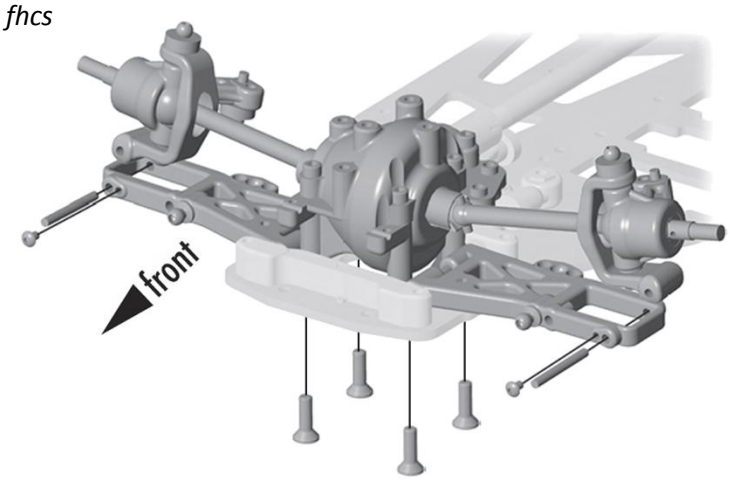

Install rear transmission case/rear hub carrier assemblies as shown using 4- 4-40 x 3/8” stainless flat head socket screws.

Qty 4, 4-40 x 3/8” fhcs

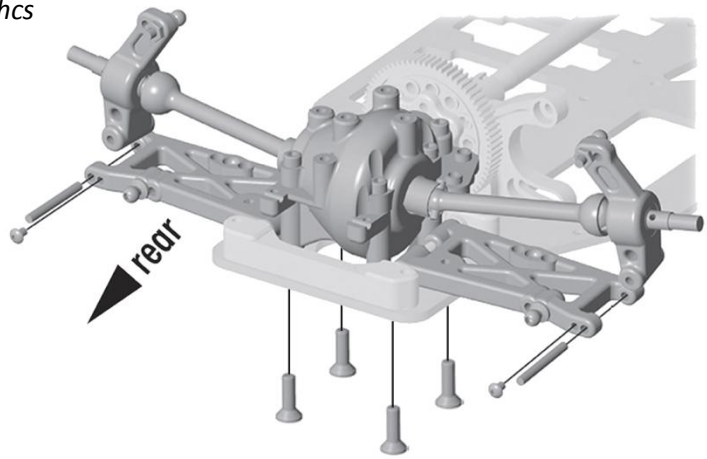

Attach front shock tower to shock tower mount using 2- 4-40 x 3/8” stainless flat head socket screws. Mount front shock tower assembly to front diff case using stock hardware as shown.

Qty 2, 4-40 x 3/8” fhcs

Qty 1, shock tower mount

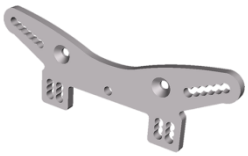

Qty 1, 3mm front shock tower

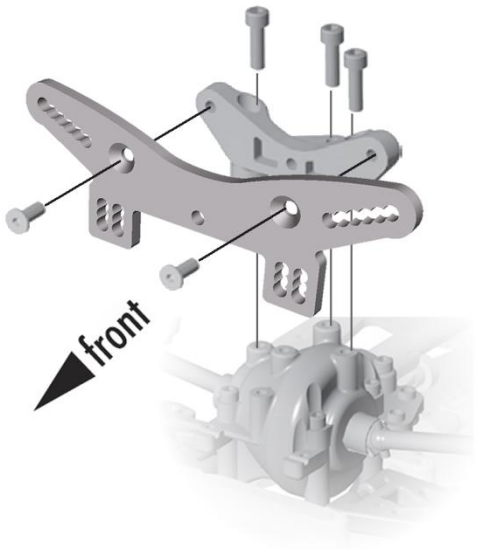

Attach rear shock tower to shock tower mount using 2-4-40 x 3/8” stainless flat head socket screws. Attach rear body posts using stock hardware and mount rear shock tower assembly to rear diff case using stock hardware as shown.

Qty 2, 4-40 x 3/8” fhcs

Qty 1, shock tower mount

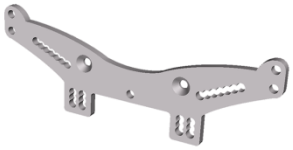

Qty 1, 3mm rear shock tower

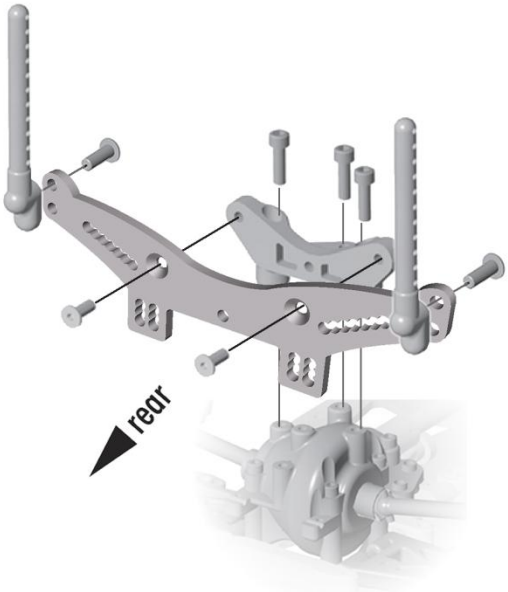

Place and align 1- 4mm diff case shim over front upper transmission case holes as shown.

{Shim can be glued to case or top plate but is not recommended}

Qty 1, 4mm diff case shim

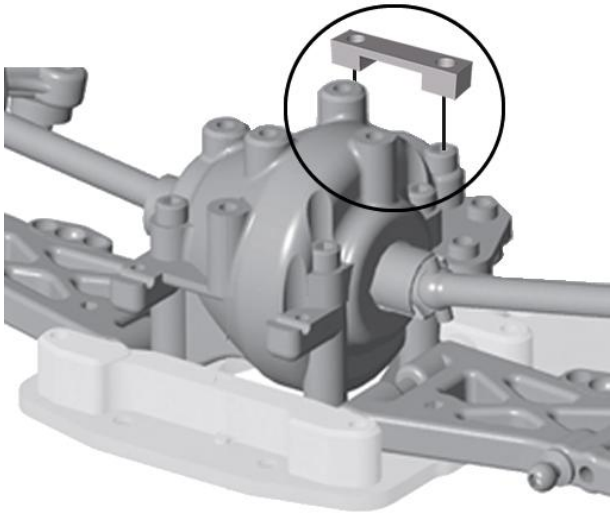

Place and align 1- 4mm diff case shim over rear upper transmission case holes as shown.

{Shim can be glued to case or top plate but is not recommended}

Qty 1, 4mm diff case shim

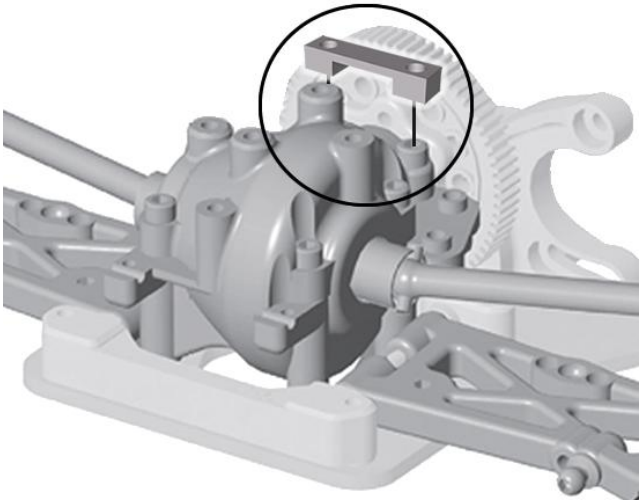

Place and align the 4mm motor mount shim over motor mount holes as shown.

{To relieve any binding in the driveline you will need to ***very*** lightly dremel or file area on motor mount shim as shown)(bottom where it covers the bearing, this pinches just a tiny bit}

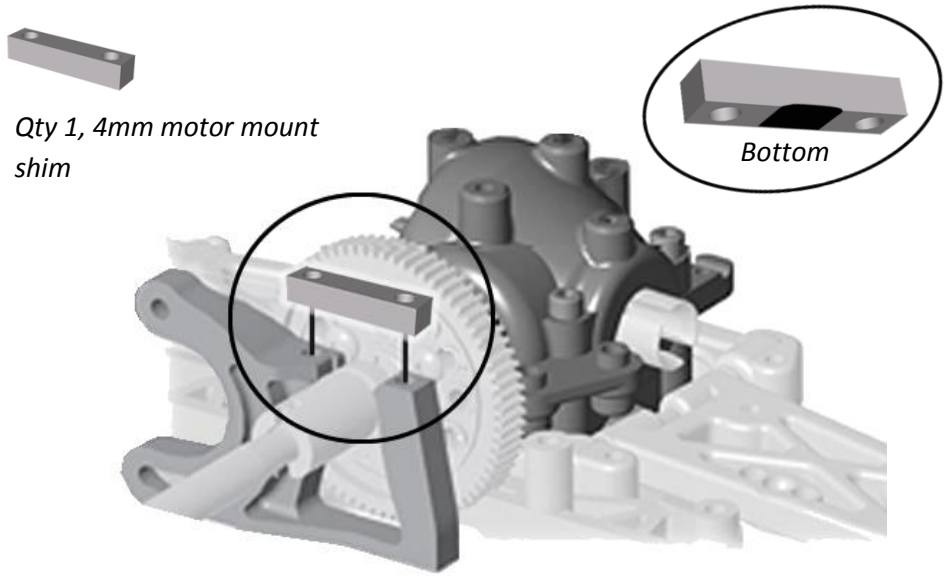

Qty 4, 3mm x 20mm bhcs

Qty 2, 3mm x 10mm bhcs

Qty 1, 2mm top plate

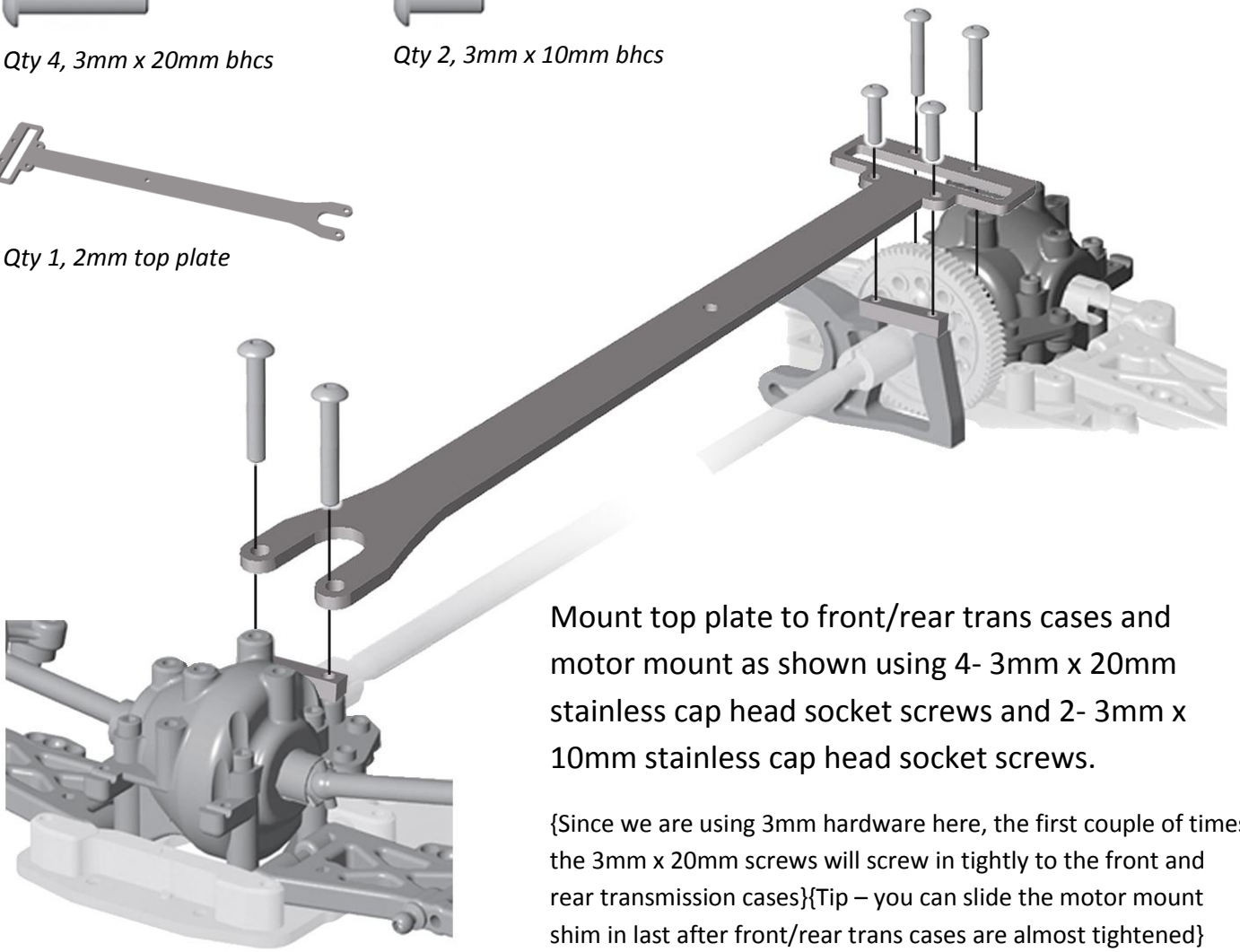

Mount top plate to front/rear trans cases and motor mount as shown using 4- 3mm x 20mm stainless cap head socket screws and 2- 3mm x 10mm stainless cap head socket screws.

{Since we are using 3mm hardware here, the first couple of times the 3mm x 20mm screws will screw in tightly to the front and rear transmission cases}{Tip – you can slide the motor mount shim in last after front/rear trans cases are almost tightened}

Attach aluminum servo mount and small aluminum servo mount to servo mount plate as shown using 3- 3mm x 6mm stainless button head socket screws.

Qty 3, 3mm x 6mm bhcs

Qty 1, servo mount plate

Qty 1, aluminum servo mount

Qty 1, small aluminum servo mount

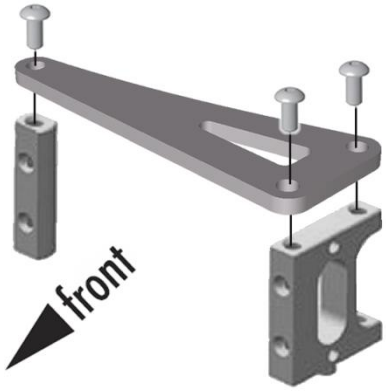

Install servo to floating servo mount as shown using 4- 3mm x 8mm stainless button head socket screws and 4- 3mm washers. Attach servo mount assembly to chassis using 2- 3mm x 6mm stainless flat head socket screws as shown.

{Attach correct servo arm or servo saver using stock hardware}

Qty 4, 3mm x 8mm bhcs

Qty 4, 3mm washer

Qty 2, 3mm x 6mm fhcs

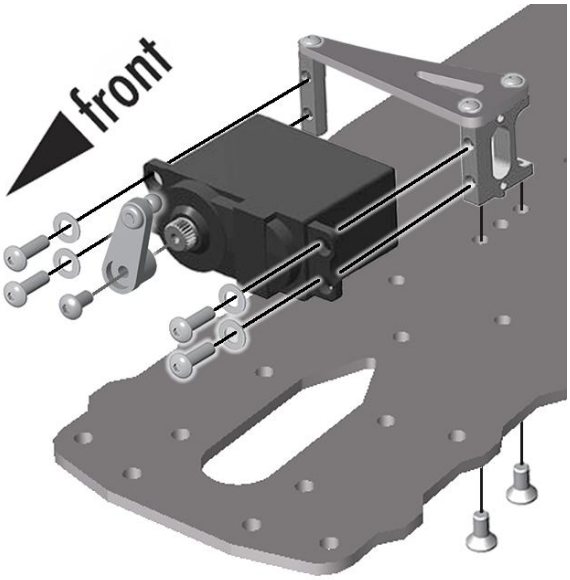

A 1/8” (3.0mm) offset spacing must be used on servo arm for proper clearance of linkage from drive shaft.

Spacers can be used to space different brand servos as shown.

{We recommend locking down the steering rack servo saver and using a servo saver arm on the servo}

1/8” (3.0mm) Offset

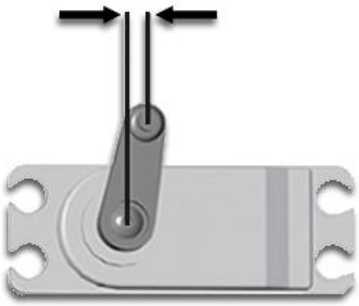

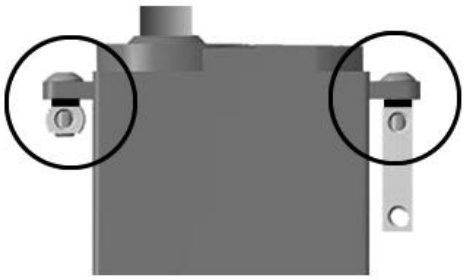

Qty 4, 4-40 x 3/8” fhcs

Qty 2, 3mm x 6mm fhcs

Qty 4, .064” black nylon spacer

Qty 4, blue aluminum mini locknut

Qty 2, 4-40 black nylon nut

Qty 2, lipo holder brace

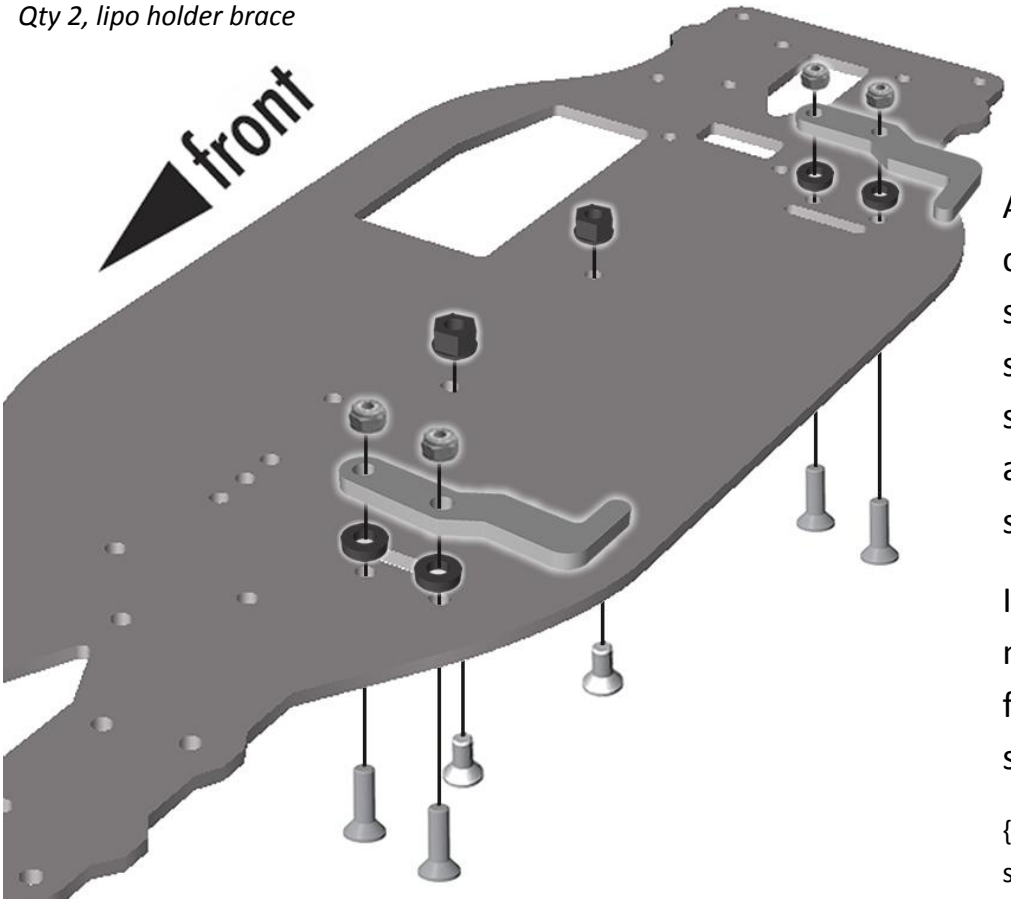

Attach lipo holder braces to chassis using 4- 4-40 x 3/8” stainless flat head socket screws, 4- .064” black nylon spacers and 4- 4-40 blue aluminum mini locknuts as shown.

Install 2- 4-40 black nylon nuts using 2- 3mm x 6mm flat head socket screws as shown.

{Battery will be taped in using tape slots}

Attach shock mounting hardware to front shock tower using stock hardware, 2- 4-40 washers and 2- 4-40 large hex nuts as shown.

Attach inner camber link ball studs to shock tower using 2- 4-40 blue aluminum mini locknuts as shown.

Qty 2, 4-40 large hex nut

Qty 2, 4-40 washer

Qty 2, blue aluminum mini locknut

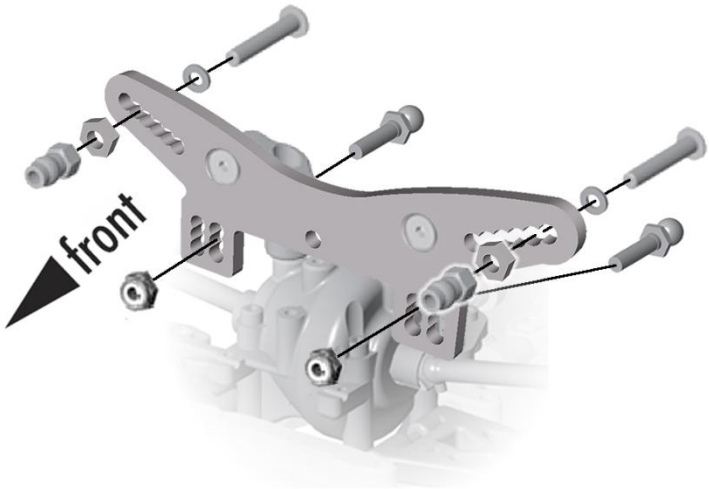

Attach shock mounting hardware to rear shock tower using stock hardware, 2- 4-40 washers and 2- 4-40 large hex nuts as shown.

Attach inner camber link ball studs to shock tower using 2- 4-40 blue aluminum mini locknuts as shown.

{Use 2- .064" black nylon spacers behind ball stud to adjust camber link angle for the rear camber link}

Qty 2, 4-40 large hex nut

Qty 2, 4-40 washer

Qty 2, .064" black nylon spacer

Qty 2, blue aluminum mini locknut

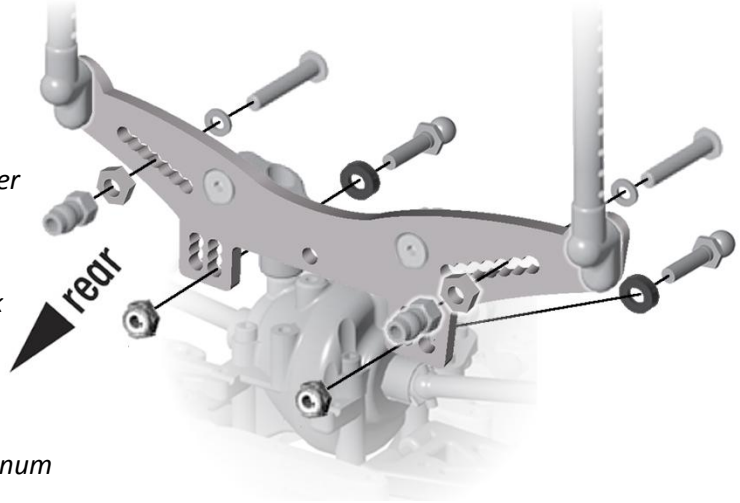

Attach front shocks to front shock tower assembly using 2- 4-40 blue aluminum mini locknuts as shown. Finish by attaching shocks to the front arms.

Qty 2, blue aluminum mini locknut

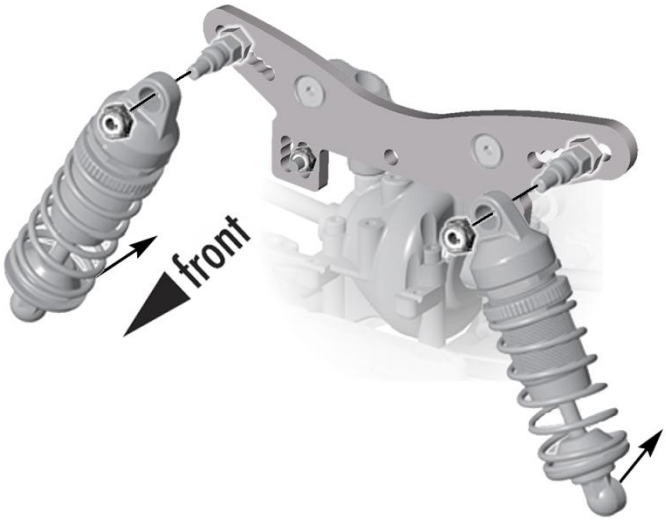

Attach rear shocks to rear shock tower assembly using 2- 4-40 blue aluminum mini locknuts as shown. Finish by attaching shocks to the rear arms.

Qty 2, blue aluminum mini locknut

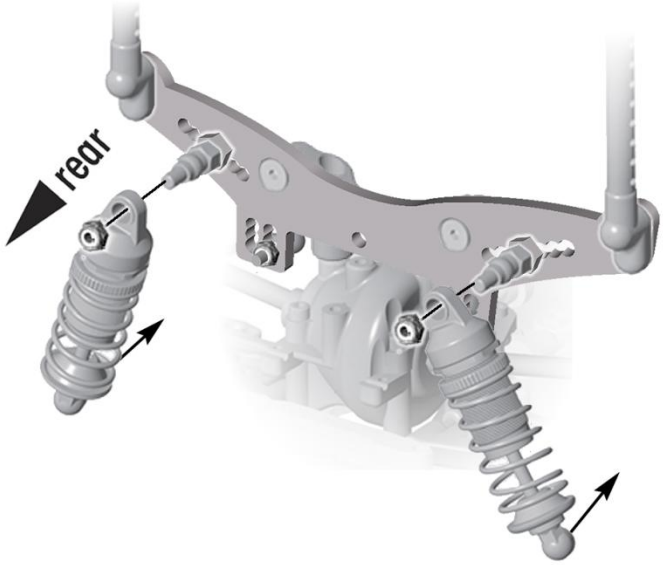

Attach the front lower bumper to the chassis using 2- 4-40 x 3/8” stainless flat head socket screws as shown.

Qty 2, 4-40 x 3/8” fhcs

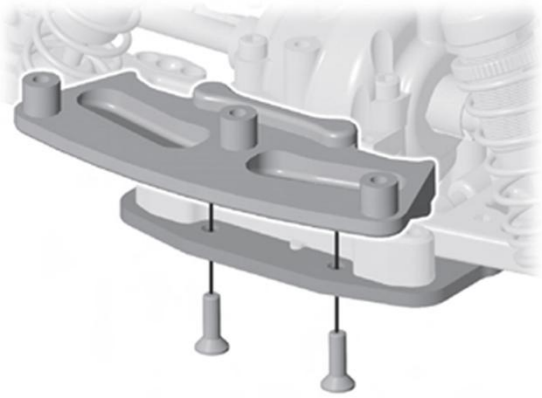

Attach front and rear camber linkages, front steering linkages and servo to steering rack linkage.

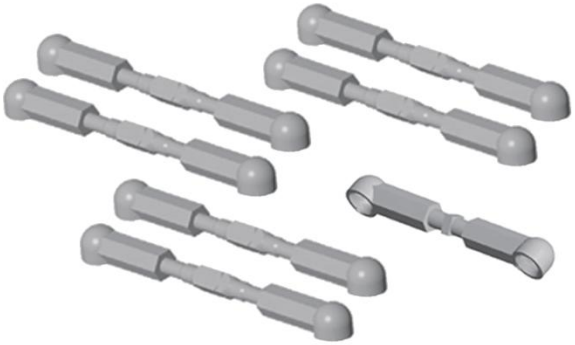

The stock chassis braces/horizontal camber mounts can be used in combination with the shock tower vertical camber mounts to achieve optimal setup if needed.

{Braces must be cut on dotted lines as shown}

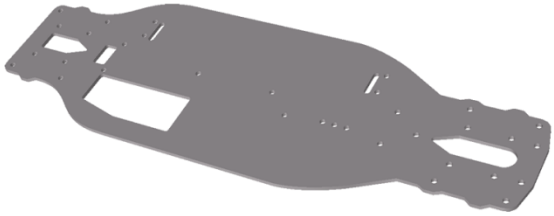

Qty 1, 2.25mm quasi carbon fiber chassis

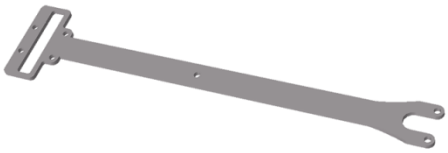

Qty 1, 2.0mm quasi carbon fiber top plate

Qty 2, shock tower mount

Qty 1, 3mm carbon fiber front shock tower

Qty 1, 3mm carbon fiber rear shock tower

Qty 1, 2.5mm carbon fiber servo plate

Qty 2, 2.5mm carbon fiber lipo holders

Qty 2, 4mm diff case shim

Qty 1, 4mm motor mount shim

Qty 1, blue aluminum motor mount

Qty 1, aluminum servo mount

Qty 1, small aluminum servo mount

Qty 20, 4-40 x 3/8" fhcs

Qty 8, 4-40 x 1/2" fhcs

Qty 4, 3mm x 20mm bhcs

Qty 2, 3mm x 10mm bhcs

Qty 4, 3mm x 8mm bhcs

Qty 3, 3mm x 6mm bhcs

Qty 6, 3mm x 6mm fhcs

Qty 2, 6.4mm x 1.1mm blue aluminum spacer

Qty 1, 6.4mm x 1.5mm blue aluminum spacer

Qty 8, .064" black nylon spacer

Qty 4, 4-40 washer

Qty 4, 3mm washer

Qty 4, 4-40 large hex nut

Qty 12, 4-40 blue aluminum mini locknut

Qty 2, 4-40 nylon nut

This manual is a guideline only to help with assembly of your Diggity Designs DC4 conversion kit. It is to be used in conjunction with your TC4 kit and manual for complete assembly.

Antenna Insert

The DC4 conversion kit has two optional antenna mount mounting holes for those who run antennas. Antenna mount is not included.

(Recommended antenna mounts are:

Racers Edge – Blue aluminum antenna mount – Part #RCE1003B

Team Xray – Thin composite antenna mount – Part #XRA306301

Schumacher – Universal composite aerial mount – Part #U1042)

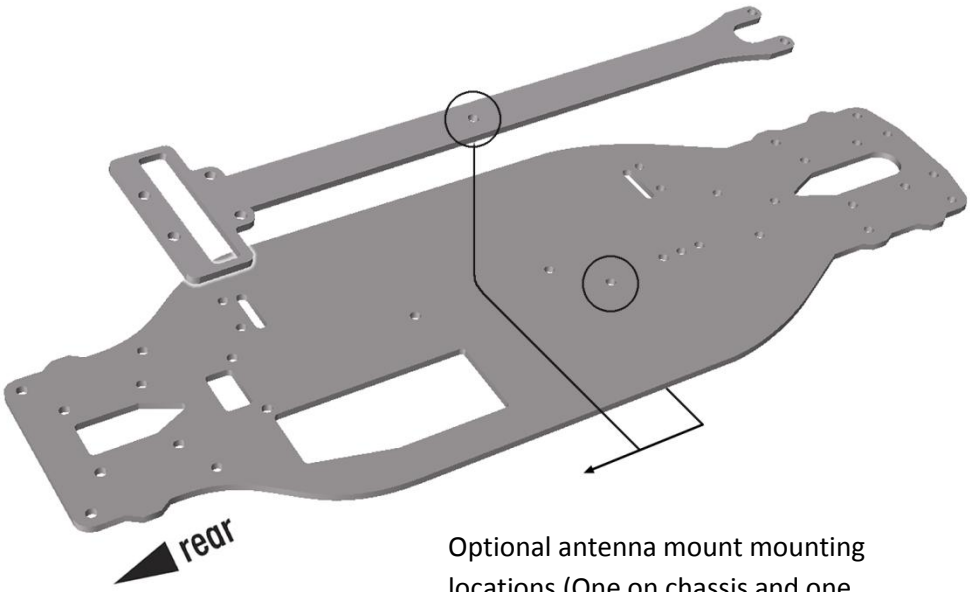

Optional antenna mount mounting locations (One on chassis and one on top plate)